SIP 6 Series

Relay Key Data

- PCB Relay with forcibly guided contacts
- Protective separation between coil/control contacts and output contacts (>8 mm) and output contacts in one row (>10 mm)
- EN50205 type A
- Contact mounting: SIP512 Control contacts 1 NO / 1 NC
  Output contacts 4 NO
  SIP422 Control contacts 2 NC
  Output contacts 4 NO
- High switching power
- Nominal coil power 1,3 W
- Holding coil power 0,39 W
- For railway application (EN50155) on request

Dimensions

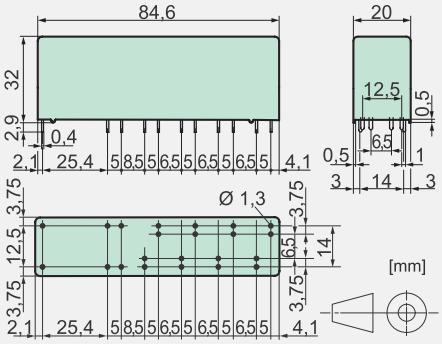

Control Contact

Contact material	$AgSnO_2$ + 0,2 µm Au
Rated switching capacity	250 VAC 6 A AC1 1500 VA
Electr. life AC 1(360 cycles / h)	approx.100000
Inrush current max.	15 A for 20 ms
Switching voltage range	5 to 250 VDC / VAC
Switching current range*	5 mA to 6 A
Switching capacity range*	60 mW to 1500 W(VA)
Contact resistance (as delivered)	≤100 mΩ / 6 V / 100 mA

Output Contact

Contact material	$AgSnO_2$
Rated switching capacity	250 VAC (440 VAC) 16 A AC1 4000 VA
Electr. life AC 1(360 cycles / h)	approx.250000
Inrush current max.	60 A for 20 ms
Switching voltage range	5 to 250 VDC (480 VAC)
Switching current range*	10 mA to 16 A
Switching capacity range*	120 mW to 4000 W(VA)
Contact resistance (as delivered)	≤100 mΩ / 6 V / 100 mA

*Guided values

Standard coils for direct current

(other voltages on request)

Nominal voltage VDC	Min. pick-up voltage at 20 °C	Drop-out voltage at 20 °C	Nominal current in mA	Resistance in Ohm at 20 °C
6	4,2	≥0,6	218,0	27,5 ± 10%
12	8,4	≥1,2	109,0	110 ± 10%
18	12,6	≥1,8	72,0	248 ± 10%
24	16,8	≥2,4	54,5	440 ± 10%
48	33,6	≥4,8	27,2	1760 ± 10%
60	42,0	≥6,0	21,8	2750 ± 10%
110	77,0	≥11,0	11,8	9250 ± 13%
220	154,0	≥22,0	5,9	37000 ± 15%

Circuit Diagram (view on relay upper side)

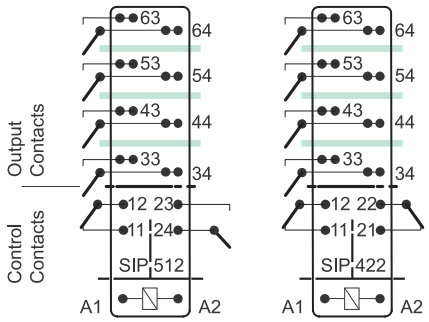

Insulation Data

- Basic insulation	at 250 VAC
- Air and creepage distance	>4 mm
- Test voltage	2500 V / 50 Hz / 1 min
- Double or reinforced insulation	at 250 VAC
- Air and creepage distance	>8 mm
- Test voltage	4000 V / 50 Hz / 1 min
- Double or reinforced insulation	at 250 VAC
- Air and creepage distance	>10 mm
- Test voltage	5000 V / 50 Hz / 1 min
Test voltage contact open	1500 V / 50 Hz / 1 min
Creepage resistance	CTI 250
Pollution degree	2
Overvoltage category	III
Insulation resistance at Up 500 VDC	>100 MΩ

Additional Data

Mechanical endurance	>10 x 10^6 operations
Switching frequency, mechanical	15 Hz
Response time (all NO closed)	typically 18 ms
Drop-out time** (all NC closed)	typically 5 ms
Bounce time of NO contact	typically 8 ms
Bounce time of NC contact	typically 12 ms
Shock resistance 16 ms	NO > 10g NC > 8g
Vibration resistance	
10-200 Hz	NO > 10g
10-50 Hz	NC > 5g
50-200 Hz	NC > 3,5g
Resistance to short circuiting control contacts	1000 A SCPD 6 A gG / gL (pre-fuse)
Resistance to short circuiting output contacts	1000 A SCPD 16 A gG / gL (pre-fuse)
Ambient temperature	-40°C to +70°C
Thermal resistance	40 K / W
Temperature limit for coil	125°C
Weight	ca. 60 g
Mounting position	any
Type of protection	RT II
Solder bath temperature	270°C / 5 s

**without spark suppression

Tests, Regulations

Approvals

UL File E188953	Sec. 4
Insulation class IEC 60664-1	250 VAC
Fire protection requirements	UL 94 / V0

Options, Accessories

none available

Product Key

SIP 4 2 2 24VDC

- Coil voltage
- Soldering tags
- Number of NC contacts
- Number of NO contacts
- Type designation

Contact Lifetime output contacts DC

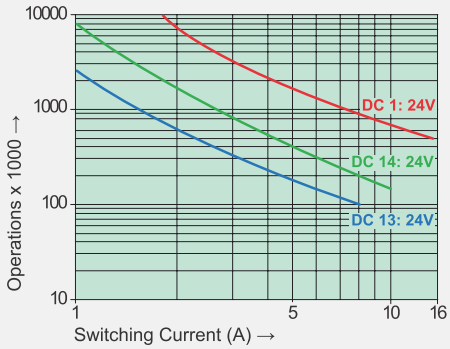

Contact Lifetime output contacts AC

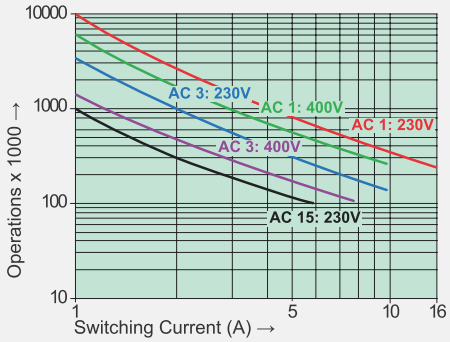

UL 508: A600 / R150
Maximal contact load at AC 1 with 230 V:
2 contacts with 16 A each
3 contacts with 12 A each
4 contacts with 10 A each

Load Limit Curve with Direct Current

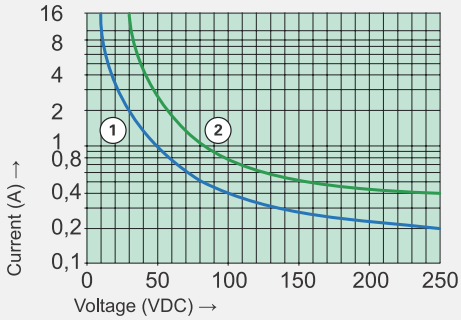

1) Inductive load L/R 40 ms
2) Resistive load

Excitation Voltage Range

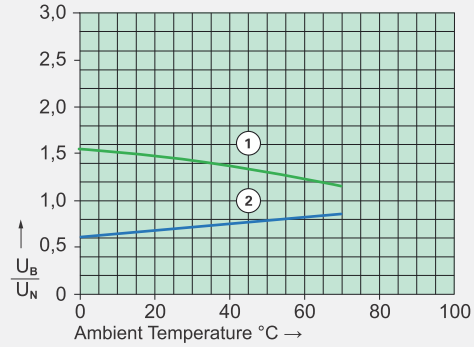

1) Max. excitation voltage with contact load: control contacts ≤4 A, output contacts ≤12 A
2) Min. excitation voltage (guaranteed values) without previous operation

ELESTA GmbH, Heuteilstrasse 18, CH - 7310 Bad Ragaz, Switzerland
Fon: +41 (0)81 303 54 00
Fax: +41 (0)81 303 54 01
© Copyright 05/2015