Data Sheet

Parker Lucifer

22-06-2004

General information

Lucifer ref.:	221G2131 Note 1	**Body:**	Brass body
Global ref.:	7221GBG64NCH	**Seat disc:**	NBR
Housing ref.:	2995	**Ways notation:**	2/2
Coil ref.:	481865 Note 2	**Valve function:**	Normally closed
Protection class:	-	**Valve actuation:**	Magnalift
Assembly wt. (g):	1170	**Mounting:**	Pipe mounting

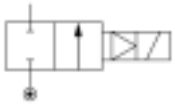

Specifications

Connection / Orifice

Port size (inches):	1
Nom. dia. (mm):	25
Orifice EXH. (mm):	-

Flow factors

Qn (L/min):	14000
Qn EXH. (L/min):	-
C (dm³/s bar):	53
Kv (L/min):	160
Kv EXH. (L/min):	-
Qmax (L/min):	160

Temperature values (°C)

a. Fluid temperatures

	Min.	Max.
With air:	-10	100
With water:	0	75
With steam:	-	-
With oil:	-10	100

Pressure values (Bar)

Min. pressure:	0.00
Max. press. (DC):	10.00
Max. press. (AC):	-

Power values (W)

Power DC:	9
Power AC:	-

b. Ambient temperatures

Minimum:	-10
Maximum:	50

Notes

1 4 position selector for controlled closure rate

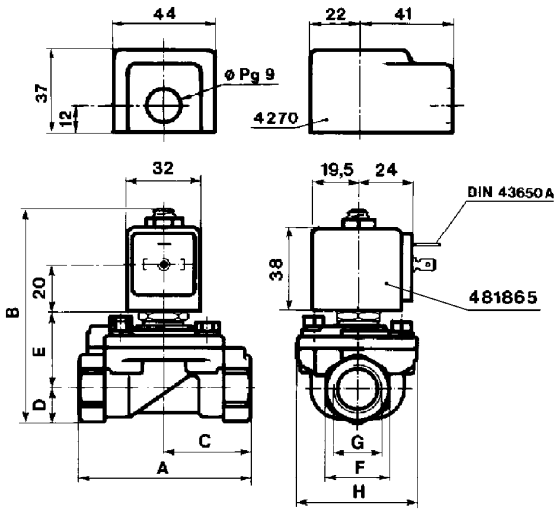

	A mm	B mm	C mm	D mm	E mm	F mm	G inch	H mm
G15/25	75	93	37.5	15	34	27	1/2	53
G13/23	75	93	37.5	15	34	27	3/8	53
G16/26	80	95.5	40	17.5	34	32	3/4	53
G17/27	85	102.5	42.5	22.5	36	41	1	53
G21	100	108	50	23	41	41	1	70

Dimension drawing

© Parker Lucifer S.A.